How AWS Pricing Works

AWS Whitepaper

How AWS Pricing Works: AWS Whitepaper

Copyright © 2023 Amazon Web Services, Inc. and/or its affiliates. All rights reserved.

Amazon's trademarks and trade dress may not be used in connection with any product or service that is not Amazon's, in any manner that is likely to cause confusion among customers, or in any manner that disparages or discredits Amazon. All other trademarks not owned by Amazon are the property of their respective owners, who may or may not be affiliated with, connected to, or sponsored by Amazon.

Table of Contents

Abstract and introduction 1
- Abstract 1
- Are you Well-Architected? 1
- Introduction 1

Key principles 2
- Understand the fundamentals of pricing 2
- Start early with cost optimization 2
- Maximize the power of flexibility 2
- Use the right pricing model for the job 3

Get started with the AWS Free Tier 4
- Free trials 4
- 12 Months Free 4
- Always Free 4

AWS Pricing/TCO Tools 6
- AWS Pricing Calculator 6
- Migration Evaluator 6

Pricing details for individual services 8
- 8
- Amazon EC2 8
  - Pricing models for Amazon EC2 8
  - Per-second billing 9
  - Estimating Amazon EC2 costs 9
- Lambda 10
  - Lambda pricing 10
  - Additional charges 10
- Amazon EBS 11
  - How Amazon EBS is priced 11
- Amazon Simple Storage Service (Amazon S3) 11
  - Estimating Amazon S3 storage costs 12
- Amazon S3 Glacier 12
  - Amazon S3 Glacier provides low-cost, long-term storage 12
  - Data access options 12
  - Storage and bandwidth include all file overhead 13
  - Amazon S3 Glacier Select pricing 13
  - Data transfer 13
- AWS Outposts 13
  - Pricing of Outposts configurations 14
- AWS Snow Family 14
  - Snowcone 14
  - Snowball 15
  - Snowmobile 15
- Amazon RDS 16
  - Estimating Amazon RDS costs 16
- DynamoDB 17
  - Amazon DynamoDB pricing at a glance 17
- CloudFront 19
  - CloudFront pricing 20
- Amazon Kendra 20
  - Amazon Kendra pricing 20
- Amazon Macie 21
  - Macie pricing 21
- Amazon Kinesis 21
  - Amazon Kinesis Video Streams 22
  - Kinesis Video Streams pricing 22

WebRTC pricing ... 22
AWS IoT Events ... 22
AWS IoT Events pricing ... 23
AWS Cost Optimization ... 24
Choose the right pricing models ... 24
Use RIs to reduce Amazon RDS, Amazon Redshift, Amazon ElastiCache, and Amazon OpenSearch Service costs ... 24
Amazon EC2 Cost Savings ... 24
Match capacity with demand ... 24
Identify Amazon EC2 instances with low-utilization, and reduce cost by stopping or rightsizing. ... 24
Identify Amazon RDS and Amazon Redshift instances with low utilization and reduce cost by stopping (RDS) and pausing (Redshift). ... 24
Analyze DynamoDB usage and reduce cost by leveraging AutoScaling or on-demand. ... 25
Implement processes to identify resource waste ... 25
Identify Amazon EBS volumes with low-utilization and reduce cost by snapshotting, then deleting them ... 25
Analyze Amazon S3 usage and reduce cost by leveraging lower cost storage tiers ... 25
Review networking and reduce costs by deleting idle load balancers ... 25
AWS Support Plan Pricing ... 26
Cost calculation examples ... 27
Topics ... 27
AWS Cloud cost calculation example ... 27
Architecture ... 27
Daily usage profile ... 28
Amazon EC2 cost breakdown ... 29
Hybrid cloud cost calculation example ... 30
Hybrid architecture description ... 30
Hybrid cloud components selection ... 31
Hybrid cloud architecture cost breakdown ... 33
Conclusion ... 35
Contributors ... 36
Further Reading ... 37
AWS glossary ... 38
Document Revisions ... 39
Notices ... 40

Abstract and introduction

Publication date: **February 24, 2023** (*Document Revisions* (p. 39))

Abstract

Amazon Web Services (AWS) helps you move faster, reduce IT costs, and attain global scale through a broad set of global compute, storage, database, analytics, application, and deployment services. One of the main benefits of cloud services is the ability it gives you to optimize costs to match your needs, even as those needs change over time.

Are you Well-Architected?

The AWS Well-Architected Framework helps you understand the pros and cons of the decisions you make when building systems in the cloud. The six pillars of the Framework allow you to learn architectural best practices for designing and operating reliable, secure, efficient, cost-effective, and sustainable systems. Using the AWS Well-Architected Tool, available at no charge in the AWS Management Console, you can review your workloads against these best practices by answering a set of questions for each pillar.

For more expert guidance and best practices for your cloud architecture—reference architecture deployments, diagrams, and whitepapers—refer to the AWS Architecture Center.

Introduction

AWS has the services to help you build sophisticated applications with increased flexibility, scalability, and reliability. Whether you're looking for compute power, database storage, content delivery, or other functionality, with AWS you pay only for the individual services you need, for as long as you use them, without complex licensing. AWS offers you a variety of pricing models for over 160 cloud services. You only pay for the services you consume, and once you stop using them, there are no additional costs or termination fees. This whitepaper provides an overview of how AWS pricing works across some of the most widely used services. The latest pricing information for each AWS service is available at: AWS Pricing.

Key principles

Although pricing models vary across services, it's worthwhile to review key principles and best practices that are broadly applicable.

Understand the fundamentals of pricing

There are three fundamental drivers of cost with AWS: compute, storage, and outbound data transfer. These characteristics vary somewhat, depending on the AWS product and pricing model you choose.

In most cases, there is no charge for inbound data transfer or for data transfer between other AWS services within the same Region. There are some exceptions, so be sure to verify data transfer rates before beginning. Outbound data transfer is aggregated across services and then charged at the outbound data transfer rate. This charge appears on the monthly statement as *AWS Data Transfer Out*. The more data you transfer, the less you pay per GB. For compute resources, you pay by the hour or by the second from the time you launch a resource until the time you stop or terminate it, unless you have made a reservation for which the cost is agreed upon beforehand. For data storage and transfer, you typically pay per GB.

Except as otherwise noted, AWS prices are exclusive of applicable taxes and duties, including value-added tax (VAT) and sales tax. For customers with a Japanese billing address, use of AWS is subject to Japanese Consumption Tax. For more information, see Amazon Web Services Consumption Tax FAQ.

Start early with cost optimization

The cloud allows you to trade fixed expenses (such as data centers and physical servers) for variable expenses, and only pay for IT as you consume it. And because of the economies of scale, the variable expenses are much lower than what you would pay to do it yourself. Whether you started in the cloud or you are just starting your migration journey to the cloud, AWS has a set of solutions to help you manage and optimize your spend. This includes services, tools, and resources to organize and track cost and usage data, enhance control through consolidated billing and access permission, enable better planning through budgeting and forecasts, and further lower cost with resources and pricing optimizations. To learn how you can optimize and save costs today, visit Optimize and Save your IT costs.

Maximize the power of flexibility

AWS services are priced independently and transparently, and available on-demand, so you can choose and pay for exactly what you need. You may also choose to save money through a reservation model. By paying for services on an as-needed basis, you can redirect your focus to innovation and invention, reducing procurement complexity and enabling your business to be fully elastic.

One of the key advantages of cloud-based resources is that you don't pay for them when they're not running. By turning off instances you don't use, you can reduce costs by 70 percent or more compared to using them 24/7. This enables you to be cost efficient and, at the same time, have all the power you need when workloads are active.

Use the right pricing model for the job

AWS offers several pricing models depending on product. These include:

- **On-Demand Instances** let you pay for compute or database capacity by the hour or second (minimum of 60 seconds) depending on which instances you run, with no long-term commitments or upfront payments.
- The **Savings Plans** flexible pricing model offers low prices on Amazon Elastic Compute Cloud (Amazon EC2), Amazon SageMaker, AWS Lambda, and AWS Fargate usage in exchange for a commitment to a consistent amount of usage (measured in $/hour) for a one or three-year term.
- The **Spot Instance** Amazon EC2 pricing mechanism lets you request spare computing capacity with no upfront commitment and at discounted hourly rate (up to 90 percent off the on-demand price).
- **Reservations** provide you with the ability to receive a greater discount (up to 75 percent) by paying for capacity ahead of time. For more details, see the AWS Cost Optimization (p. 24) section.

Get started with the AWS Free Tier

The AWS Free Tier enables you to gain free, hands-on experience with more than 60 products on the AWS platform. AWS Free Tier includes the following free offer types:

- **Free trials** – These offers are short-term free trials starting from date you activate a particular service. Once the trial period expires, you simply pay standard, pay-as-you-go service rates.
- **12 Months Free** – These tier offers include 12 months of free usage following your initial sign-up date to AWS. When your 12-month free usage term expires, or if your application use exceeds the tiers, you simply pay standard, pay-as-you-go service rates.
- **Always Free** – These free tier offers do not expire and are available to all AWS customers.

This section lists some of the most commonly used AWS Free Tier services. Terms and conditions apply. For the full list of AWS Free Tier services, see AWS Free Tier.

Free trials

- Amazon SageMaker: 250 hours per month of ml.t3.medium on Studio notebooks OR 250 hours per month of ml.t2.medium or ml.t3.medium on on-demand notebook instances for two months. 25 hours per month on ml.m5.4xlarge on SageMaker Data Wrangler for two months. 10 million write units, 10 million read units, and 25 GB storage per month for two months on SageMaker Feature Store. 50 hours per month of m4.xlarge or m5.xlarge instances on Training for two months. 125 hours of m4.xlarge or m5.xlarge instance per month on Inference for two months.
- Amazon Redshift: 750 hours per month for free (this amounts to enough hours to continuously run one DC2). Large node with 160GB of compressed SSD storage. You can also build clusters with multiple nodes to test larger datasets, which will consume your free hours more quickly. Once your two-month free trial expires or your usage exceeds 750 hours per month, you can shut down your cluster to avoid any charges, or keep it running at the standard On-Demand Rate.

12 Months Free

- Amazon EC2: 750 hours per month of Linux, RHEL, or SLES t2.micro/ t3.micro instance usage or 750 hours per month of Windows t2.micro/t3.micro instance usage dependent on Region.
- Amazon Simple Storage Service (Amazon S3): 5 GB of Amazon S3 standard storage, 20,000 GET requests, and 2,000 PUT requests.
- Amazon Relational Database Service (Amazon RDS): 750 hours of Amazon RDS Single-AZ db.t2.micro, db.t3.micro, and db.t4g.micro instances usage for running MySQL, PostgreSQL, MariaDB, or db.t2.micro instance usage running SQL Server (running SQL Server Express Edition); 20 GB of general purpose SSD database storage and 20 GB of storage for database backup and database snapshots. Amazon CloudFront: 50 GB data transfer out and 2,000,000 HTTP and HTTPS requests each month.

Always Free

- Amazon DynamoDB: Up to 200 million requests per month (25 write capacity units (WCUs) and 25 read capacity units (RCUs)); 25 GB of storage.

- Amazon S3 Glacier: Retrieve up to 10 GB of your Amazon S3 Glacier data per month for free (applies to standard retrievals using the Glacier API only).
- AWS Lambda: 1 million free requests per month; up to 3.2 million seconds of compute time per month.

The AWS Free Tier is not available in the AWS GovCloud (US) Regions or the China (Beijing) Region at this time. The Lambda Free Tier is available in the AWS GovCloud (US) Region.

AWS Pricing/TCO Tools

To get the most out of your estimates, you should have a good idea of your basic requirements. For example, if you're going to try Amazon EC2, it might help if you know what kind of operating system you need, what your memory requirements are, and how much I/O you need. You should also decide whether you need storage, if you're going to run a database, and how long you intend to use the servers. You don't need to make these decisions before generating an estimate; you can play around with the service configuration and parameters to see which options fit your use case and budget best. For more information about AWS service pricing, see AWS Pricing.

AWS offers free pricing and migration tools for you to use. If the workload details and services to be used are identified, AWS Pricing Calculator can help with calculating the total cost of ownership. Migration Evaluator helps with inventorying your existing environment, identifying workload information, and designing and planning your AWS migration.

AWS Pricing Calculator

AWS Pricing Calculator is a web-based service that you can use to create cost estimates to suit your AWS use cases. This service is useful both for people who have never used AWS and for those who want to reorganize or expand their usage.

AWS Pricing Calculator allows you to explore AWS services based on your use cases and create a cost estimate. You can model your solutions before building them, explore the price points and calculations behind your estimate, and find the available instance types and contract terms that meet your needs. This enables you to make informed decisions about using AWS. You can plan your AWS costs and usage or price out setting up a new set of instances and services.

AWS Pricing Calculator is free for use and provides an estimate of your AWS fees and charges (not including taxes). AWS Pricing Calculator provides pricing details for your information only. AWS Pricing Calculator provides a console interface at AWS Pricing Calculator.

Migration Evaluator

Migration Evaluator (formerly TSO Logic) is a complimentary service to create data-driven business cases for AWS Cloud planning and migration.

Creating business cases on your own can be a time-consuming process and does not always identify the most cost-effective deployment and purchasing options. Migration Evaluator quickly provides a business case to make sound AWS planning and migration decisions. With Migration Evaluator, your organization gets access to AWS expertise, visibility into multiple cost-effective cloud migration scenarios, and insights on reusing existing software licensing to further reduce costs.

A business case is the first step in the AWS migration journey. Beginning with on-premises inventory discovery, you can choose to upload exports from third-party tools or install a complimentary agentless collector to monitor Windows, Linux, and SQL Server footprints. As part of a white-glove experience, Migration Evaluator includes a team of program managers and solution architects to capture your migration objective and use analytics to narrow down the subset of migration patterns best suited to your business needs. The results are captured in a transparent business case which aligns business and technology stakeholders to provide a prescriptive next step in your migration journey.

Migration Evaluator service analyzes an enterprise's compute footprint, including server configuration, utilization, annual costs to operate, eligibility for bring-your-own-license, and hundreds of other parameters. It then statistically models utilization patterns, matching each workload with optimized placements in EC2 and Amazon Elastic Block Store (Amazon EBS). Finally, it outputs a business case with a comparison of the current-state against multiple future-state configurations showing the flexibility of AWS.

For more information, see Migration Evaluator.

Pricing details for individual services

Different types of services lend themselves to different pricing models. For example, Amazon EC2 pricing varies by instance type, whereas the Amazon Aurora database service includes charges for data I/O and storage. This section provides an overview of pricing concepts and examples for a few AWS services. You can always find current price information for each AWS service at AWS Pricing.

Amazon EC2

Amazon EC2 is a web service that provides secure, resizable compute capacity in the cloud. It is designed to make web-scale cloud computing easier for developers. The simple web service interface of Amazon EC2 allows you to obtain and configure capacity with minimal friction and with complete control of your computing resources.

Amazon EC2 reduces the time required to obtain and boot new server instances to minutes, allowing you to quickly scale capacity, both up and down, as your computing requirements change.

Pricing models for Amazon EC2

There are four ways to pay for Amazon EC2 instances: On-Demand Instances, Savings Plans, Spot Instances, and Reserved Instances (RIs).

On-Demand Instances

With On-Demand Instances, you pay for compute capacity per hour or per second, depending on which instances you run. No long-term commitments or up-front payments are required. You can increase or decrease your compute capacity to meet the demands of your application and only pay the specified hourly rates for the instance you use. On-Demand Instances are recommended for the following use cases:

- Users who prefer the low cost and flexibility of Amazon EC2 without upfront payment or long-term commitments.
- Applications with short-term, spiky, or unpredictable workloads that cannot be interrupted.
- Applications being developed or tested on Amazon EC2 for the first time.

Savings Plans

Savings Plans is a flexible pricing model that offers low prices on Amazon EC2, SageMaker, Lambda, and Fargate usage, in exchange for a commitment to a consistent amount of usage (measured in $/hour) for a one or three-year term. Savings Plans is a flexible pricing model that provides savings of up to 72 percent on your AWS compute usage. This pricing model offers lower prices on Amazon EC2 instances usage, regardless of instance family, size, operating system (OS), tenancy, or AWS Region, and also applies to SageMaker, Fargate, and Lambda usage.

For workloads that have predictable and consistent usage, Savings Plans can provide significant savings compared to On-Demand pricing. It is recommended for:

- Workloads with consistent and steady-state usage.
- Customers who want to use different instance types and compute solutions across different locations.
- Customers who can make a monetary commitment to use compute services over a one or three-year term.

Spot Instances

Amazon EC2 Spot Instances allow you to request spare Amazon EC2 computing capacity for up to 90 percent off the On-Demand price. Spot Instances are recommended for:

- Applications that have flexible start and end times.
- Applications that are only feasible at very low compute prices.
- Users with fault-tolerant and/or stateless workloads.

Spot Instance prices are set by Amazon EC2 and adjust gradually based on long-term trends in supply and demand for Spot Instance capacity.

RIs

Amazon EC2 Reserved Instances provide you with a significant discount (up to 75 percent) compared to On-Demand Instance pricing. In addition, when RIs are assigned to a specific Availability Zone, they provide a capacity reservation, giving you additional confidence in your ability to launch instances when you need them.

Per-second billing

Per-second billing saves money and has a minimum of 60 seconds billing. It is particularly effective for resources that have periods of low and high usage such as development and testing, data processing, analytics, batch processing, and gaming applications. Learn more about per-second billing.

Estimating Amazon EC2 costs

When you begin to estimate the cost of using Amazon EC2, consider the following:

- **Clock hours of server time:** Resources incur charges when they are running; for example, from the time Amazon EC2 instances are launched until they are terminated, or from the time Elastic IP addresses are allocated until the time they are de-allocated.
- **Instance type:** Amazon EC2 provides a wide selection of instance types optimized to fit different use cases. Instance types comprise varying combinations of CPU, memory, storage, and networking capacity, and give you the flexibility to choose the appropriate mix of resources for your applications. Each instance type includes at least one instance size, allowing you to scale your resources to the requirements of your target workload.
- **Pricing model**: With On-Demand Instances, you pay for compute capacity by the hour or by the second with no required minimum commitments.
- **Number of instances**: You can provision multiple instances of your Amazon EC2 and Amazon EBS resources to handle peak loads.
- **Load balancing:** You can use Elastic Load Balancing (ELB) to distribute traffic among Amazon EC2 Instances. The number of hours ELB runs and the amount of data it processes contribute to the monthly cost.
- **Detailed monitoring**: You can use Amazon CloudWatch to monitor your Amazon EC2 instances. By default, basic monitoring is enabled. For a fixed monthly rate, you can opt for detailed monitoring, which includes seven pre-selected metrics recorded once a minute. Partial months are charged on an hourly pro rata basis, at a per instance-hour rate.
- **Amazon EC2 Auto Scaling**: Amazon EC2 Auto Scaling automatically adjusts the number of Amazon EC2 instances in your deployment according to the scaling policies you define. This service is available at no additional charge beyond CloudWatch fees.
- **Elastic IP addresses**: You can have one Elastic IP address associated with a running instance at no charge.

- **Licensing:** To run operating systems and applications on AWS, you can obtain variety of software licenses from AWS on a pay-as-you-go basis that are fully compliant and do not require you to manage complex licensing terms and conditions. However, if you have existing licensing agreements with software vendors, you can bring your eligible licenses to the cloud to reduce total cost of ownership (TCO). AWS offers License Manager, which makes it easier to manage your software licenses from vendors such as Microsoft, SAP, Oracle, and IBM across AWS and on-premises environments.

For more information, see Amazon EC2 pricing.

Lambda

AWS Lambda lets you run code without provisioning or managing servers. You pay only for the compute time you consume; there is no charge when your code is not running. With Lambda, you can run code for virtually any type of application or backend service, all with zero administration. Just upload your code and Lambda takes care of everything required to run and scale your code with high availability.

Lambda pricing

With Lambda, you pay only for what you use. You are charged based on the number of requests for your functions and the time it takes for your code to execute. Lambda registers a request each time it starts launching in response to an event notification or invoke call, including test invokes from the console. You are charged for the total number of requests across all your functions.

Duration is calculated from the time your code begins executing until it returns or otherwise terminates, rounded up to the nearest 1 millisecond (ms). The price depends on the amount of memory you allocate to your function.

Lambda participates in Compute Savings Plans, a flexible pricing model that offers low prices on Amazon EC2, Fargate, and Lambda usage, in exchange for a commitment to a consistent amount of usage (measured in $/hour) for a one- or three-year term. With Compute Savings Plans, you can save up to 17 percent on Lambda. Savings apply to duration, provisioned concurrency, and duration (provisioned concurrency).

Request pricing

- Free Tier: 1 million requests per month.
- $0.20 per 1 million requests thereafter, or $0.0000002 per request.

Duration pricing

- 400,000 GB-seconds per month free, up to 3.2 million seconds of compute time.
- $0.00001667 for every GB-second used thereafter.

Additional charges

You may incur additional charges if your Lambda function uses other AWS services or transfers data. For example, if your Lambda function reads and writes data to or from Amazon S3, you will be billed for the read/write requests and the data stored in Amazon S3. Data transferred in to and out of your Lambda functions from outside the Region the function executed in will be charged at the Amazon EC2 data transfer rates as listed on Amazon EC2 On-Demand Pricing under *Data Transfer*.

Amazon EBS

Amazon EBS is an easy-to-use, high-performance block storage service designed for use with Amazon EC2 instances. Amazon EBS volumes are off-instance storage that persists independently from the life of an instance. They are analogous to virtual disks in the cloud. Amazon EBS provides two volume types:

- **Solid-state drive (SSD)-backed volumes** are optimized for transactional workloads involving frequent read/write operations with small I/O size where the dominant performance attribute is IOPS.
- **Hard disk drive (HDD)-backed volumes** are optimized for large streaming workloads where throughput (measured in megabits per second) is a better performance measure than IOPS.

How Amazon EBS is priced

Amazon EBS pricing includes three factors:

- **Volumes**: Volume storage for all Amazon EBS volume types is charged by the amount of GB you provision per month, until you release the storage.
- **Snapshots**: Snapshot storage is based on the amount of space your data consumes in Amazon S3. Because Amazon EBS does not save empty blocks, it is likely that the snapshot size will be considerably less than your volume size. Copying Amazon EBS snapshots is charged based on the volume of data transferred across Regions. For the first snapshot of a volume, Amazon EBS saves a full copy of your data to Amazon S3. For each incremental snapshot, only the changed part of your Amazon EBS volume is saved. After the snapshot is copied, standard Amazon EBS snapshot charges apply for storage in the destination Region.

- **Amazon EBS Fast Snapshot Restore (FSR)**: This is charged in Date Services Unit-Hours (DSUs) for each Availability Zone in which it is enabled. DSUs are billed per minute with a one-hour minimum. The price of one FSR DSU-hour is $0.75 per Availability Zone (pricing based on us-east-1 (N.Virginia).
- **Amazon EBS direct APIs for Snapshots**: Amazon EBS direct APIs for Snapshots provide access to directly read Amazon EBS snapshot data and identify differences between two snapshots. The following charges apply for these APIs:
  - ListChangedBlocks and ListSnapshotBlocks APIs are charged per request.
  - GetSnapshotBlock and PutSnapshotBlock APIs are charged per SnapshotAPIUnit (block size 512 KiB).

- **Data transfer:** Consider the amount of data transferred out of your application. Inbound data transfer is free and outbound data transfer charges are tiered. If you use external or cross-region data transfers, additional EC2 data transfer charges will apply.

For more information, see the Amazon EBS pricing page.

Amazon Simple Storage Service (Amazon S3)

Amazon S3 is object storage built to store and retrieve any amount of data from anywhere: websites, mobile apps, corporate applications, and data from Internet of Things (IoT) sensors or devices. It is designed to deliver 99.999999999 percent durability, and stores data for millions of applications used by market leaders in every industry. As with other AWS services, Amazon S3 provides the simplicity and cost-effectiveness of pay-as-you-go pricing.

Estimating Amazon S3 storage costs

With Amazon S3, you pay only for the storage you use, with no minimum fee. Prices are based on the region of your Amazon S3 bucket. When you begin to estimate the cost of Amazon S3, consider the following:

- **Storage class:** Amazon S3 offers a range of storage classes designed for different use cases. These include S3 Standard for general-purpose storage of frequently accessed data; S3 Intelligent-Tiering for data with unknown or changing access patterns; S3 Standard-Infrequent Access (S3 Standard-IA); S3 One Zone-Infrequent Access (S3 One Zone-IA) for long-lived, but less-frequently accessed data; Amazon S3 Glacier Instant Retrieval (S3 Glacier Instant Retrieval) for long-lived data that is rarely-accessed and requires milliseconds retrieval; Amazon S3 Glacier Flexible Retrieval (S3 Glacier Flexible Retrieval); Amazon S3 Glacier Deep Archive (S3 Glacier Deep Archive) for long-term archive and digital preservation. Amazon S3 also offers capabilities to manage your data throughout its lifecycle. Once an S3 Lifecycle policy is set, your data will automatically transfer to a different storage class without any changes to your application.

- **Storage:** Costs vary with number and size of objects stored in your Amazon S3 buckets as well as type of storage.
- **Requests and data retrievals:** Requests costs made against S3 buckets and objects are based on request type and quantity of requests.
- **Data transfer:** The amount of data transferred out of the Amazon S3 region. Transfers between S3 buckets or from Amazon S3 to any service(s) within the same AWS Region are free.
- **Management and replication:** You pay for the storage management features (Amazon S3 inventory, analytics, and object tagging) that are enabled on your account's buckets.

For more information, see Amazon S3 pricing. You can estimate your monthly bill using the AWS Pricing Calculator.

Amazon S3 Glacier

Amazon S3 Glacier is a secure, durable, and extremely low-cost cloud storage service for data archiving and long-term backup. It is designed to deliver 99.999999999 percent durability, with comprehensive security and compliance capabilities that can help meet even the most stringent regulatory requirements. Amazon S3 Glacier provides query-in-place functionality, allowing you to run powerful analytics directly on your archived data at rest.

Amazon S3 Glacier provides low-cost, long-term storage

Starting at $0.0036 per GB per month, Amazon S3 Glacier Flexible Retrieval allows you to archive large amounts of data at a very low cost. You pay only for what you need, with no minimum commitments or upfront fees. Other factors determining pricing include requests and data transfers out of Amazon S3 Glacier (incoming transfers are free).

Data access options

To keep costs low yet suitable for varying retrieval needs, Amazon S3 Glacier Flexible Retrieval provides three options for access to archives that span a few minutes to several hours. Amazon S3 Glacier Instant Retrieval provides access in milliseconds. For details, see the Amazon S3 Glacier FAQs.

Storage and bandwidth include all file overhead

Rate tiers take into account your aggregate usage for Data Transfer Out to the internet across Amazon EC2, Amazon S3, Amazon Glacier, Amazon RDS, Amazon SimpleDB, Amazon Simple Queue Service (Amazon SQS), Amazon Simple Notification Service (Amazon SNS), DynamoDB, and AWS Storage Gateway.

Amazon S3 Glacier Select pricing

Amazon S3 Glacier Select allows queries to run directly on data stored in Amazon S3 Glacier without having to retrieve the entire archive. Pricing for this feature is based on the total amount of data scanned, the amount of data returned by Amazon S3 Glacier Select, and the number of Amazon S3 Glacier Select requests initiated.

For more information, see the Amazon S3 Glacier pricing page.

Data transfer

Data transfer into Amazon S3 is free. Data transfer out of Amazon S3 is priced by Region. For more information on AWS Snowball pricing, see the AWS Snowball pricing page.

AWS Outposts

AWS Outposts is a fully-managed service that extends AWS infrastructure, AWS services, APIs, and tools to any data center, colocation space, or on-premises facility. Outposts is ideal for workloads that require low latency access to on-premises systems, local data processing, or local data storage.

Outposts are connected to the nearest AWS Region to provide the same management and control plane services on premises for a truly consistent operational experience across your on-premises and cloud environments. Your Outposts infrastructure and AWS services are managed, monitored, and updated by AWS just like in the cloud.

Example AWS Outposts architecture

Pricing of Outposts configurations

Outposts are priced for Amazon EC2 and Amazon EBS capacity in the SKU. You can purchase Outposts servers for a three-year term with partial upfront, all upfront, and no upfront options available. The price includes delivery, installation, servicing, and removal at the end of the term.

AWS services running locally on Outposts will be charged for usage only. Amazon EC2 capacity and Amazon EBS storage upgrades are available. Operating system charges are billed based on usage as an uplift to cover the license fee and there is no minimum fee required. Same-Region data ingress and egress charges apply. There are no additional data transfer charges for local network usage.

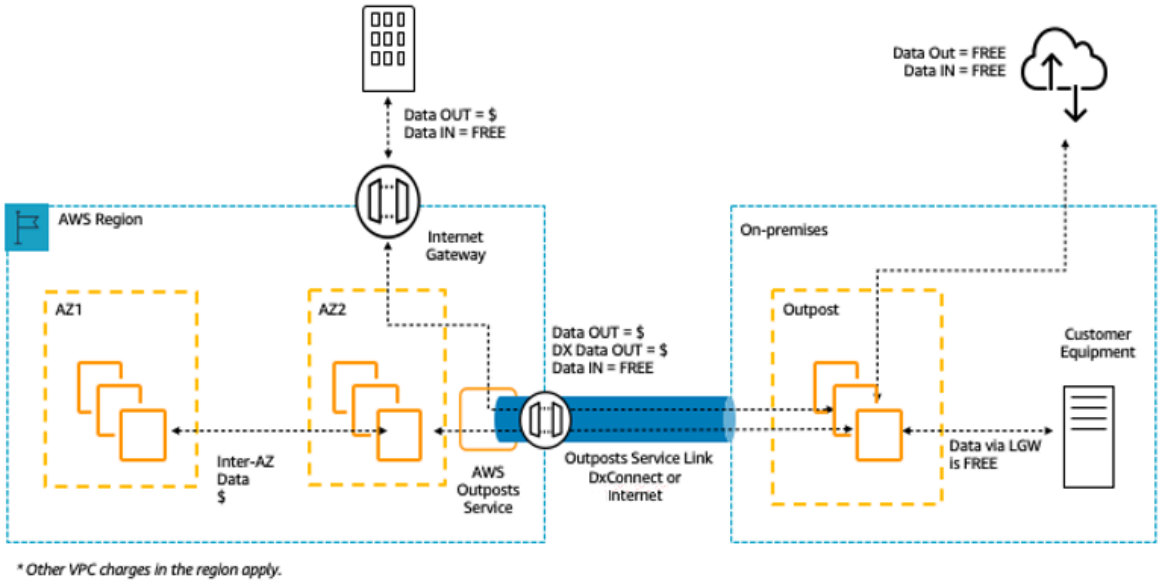

AWS Outposts ingress/egress charges

For more information, see the AWS Outposts pricing page.

AWS Snow Family

The AWS Snow Family helps customers who need to run operations in austere, non-data center environments, and in locations which lack consistent network connectivity. The Snow Family (comprised of AWS Snowcone, Snowball, and AWS Snowmobile) offers a number of physical devices and capacity profiles, most with built-in computing capabilities. These services help physically transport up to exabytes of data in to and out of AWS. Snow Family devices are owned and managed by AWS and integrate with AWS security, monitoring, storage management, and computing capabilities.

Snowcone

Snowcone is the smallest member of the AWS Snow Family of edge computing and data transfer devices. Snowcone is portable, rugged, and secure. You can use Snowcone to collect, process, and move data to AWS, either offline by shipping the device, or online with AWS DataSync.

With Snowcone, you pay only for the use of the device and for data transfer out of AWS. Data transferred offline into AWS with Snowcone does not incur any transfer fees. For online data transfer pricing with

DataSync, please refer to the DataSync pricing page. Standard pricing applies once data is stored in the AWS Cloud.

For Snowcone or Snowcone SSD, you pay a service fee per job, which includes five days of device use and a per-day fee for every additional day you use the device before sending it back to AWS. For jobs lasting longer than 30 days, you can select the monthly rental option and keep the device over the long term. For high-volume deployments, contact your AWS sales team.

For pricing details, see AWS Snowcone Pricing.

Snowball

Snowball is a data migration and edge computing device that comes in two device options: Compute Optimized and Storage Optimized.

Snowball Edge Storage Optimized devices provide 40 vCPUs of compute capacity coupled with 80 TB of usable block or Amazon S3-compatible object storage. It is well suited for local storage and large-scale data transfer. Snowball Edge Compute Optimized devices provide 52 vCPUs, 42 TB of usable block or object storage, and an optional GPU for use cases such as advanced machine learning (ML) and full motion video analysis in disconnected environments. Customers can use these two options for data collection, ML and processing, and storage in environments with intermittent connectivity (such as manufacturing, industrial, and transportation) or in extremely remote locations (such as military or maritime operations) before shipping devices back to AWS. These devices may also be rack mounted and clustered together to build larger, temporary installations.

Snowball has three pricing elements to consider: usage, device type, and term of use.

First, consider your planned use case. Is it data transfer only, or will you be running compute on the device? You can use either device for data transfer or computing, but it is more cost-effective to use a Snowball Edge Storage Optimized for data transfer jobs.

Second, choose your device (either Snowball Edge Storage Optimized or Snowball Edge Compute Optimized). You can also select the option to run GPU instances on Snowball Edge Compute Optimized for edge applications.

For on-demand use, you pay a service fee per data transfer job, which includes 10 days of on-site Snowball Edge device usage. Shipping days, including the day the device is received and the day it is shipped back to AWS, are not counted toward the 10 days. After the 10 days, you pay a low per-day fee for each additional day you keep the device.

For one-year or three-year commitments, please contact your sales team; you cannot make this selection in the AWS Management Console.

Data transferred into AWS does not incur any data transfer fees, and standard pricing applies for data stored in the AWS Cloud.

For pricing details, see AWS Snowball Pricing.

Snowmobile

Snowmobile moves up to 100 petabytes (PB) of data in a 45-foot long ruggedized shipping container and is ideal for multi-PB or exabyte (EB)-scale digital media migrations and data center shutdowns. A Snowmobile arrives at the customer site and appears as a network-attached data store for a more secure, high-speed data transfer. After data is transferred to Snowmobile, it is driven back to an AWS Region where the data is loaded into Amazon S3.

Snowmobile pricing is based on the amount of data stored on the truck per month.

Snowmobile can be made available for use with AWS services in select AWS Regions. Please follow up with AWS Sales to discuss data transport needs for your specific region and schedule an evaluation.

For pricing details, see AWS Snowmobile Pricing.

Amazon RDS

Amazon RDS is a web service that makes it easy to set up, operate, and scale a relational database in the cloud. It provides cost-efficient and resizable capacity while managing time-consuming database administration tasks, so you can focus on your applications and business.

Estimating Amazon RDS costs

The factors that drive the costs of Amazon RDS include:

- **Database instance hours:** Resources incur charges when they are running; for example, from the time you launch a database instance until you terminate it.
- **Database characteristics:** The physical capacity of the database you choose will affect how much you are charged. Database characteristics vary depending on the database engine, size, and memory class.
- **Database purchase type**: When you use On-Demand database instances, you pay for compute capacity for each hour your database instance runs, with no required minimum commitments. With Reserved database Instances, you can make a low, one-time, up-front payment for each database Instance you wish to reserve for a one or three-year term.

- **Number of database instances:** With Amazon RDS, you can provision multiple database instances to handle peak loads.
- **Provisioned database storage**: There is no additional charge for backup storage of up to 100 percent of your provisioned database storage for an active database Instance. After the database Instance is terminated, backup storage is billed per GB per month.
- **Additional storage:** The amount of backup storage in addition to the provisioned storage amount is billed per GB per month.
- **Long Term Retention**: Long Term Retention is priced per vCPU per month for each database instance in which it is enabled. The price depends on the Amazon RDS instance type used by your database, and may vary by region. If Long Term Retention is turned off, performance data older than seven days is deleted.
- **API Requests:** The API free tier includes all calls from the Performance Insights dashboard as well as 1 million calls outside of the Performance Insights dashboard. API requests outside of the Performance Insights free tier are charged at $0.01 per 1,000 requests.
- **Deployment type:** You can deploy your DB Instance to a single Availability Zone (analogous to a standalone data center) or multiple Availability Zones (analogous to a secondary data center for enhanced availability and durability). Storage and I/O charges vary, depending on the number of Availability Zones you deploy to.
- **Data transfer:** Inbound data transfer is free, and outbound data transfer costs are tiered based on the destination.

Depending on your application's needs, it's possible to optimize your costs for Amazon RDS database instances by purchasing reserved Amazon RDS database instances. To purchase RIs, you make a low, one-time payment for each instance you want to reserve and in turn receive a significant discount on the hourly usage charge for that instance.

For more information, see Amazon RDS pricing.

DynamoDB

DynamoDB is a fast and flexible NoSQL database service for all applications that need consistent, single-digit millisecond latency at any scale. It is a fully-managed cloud database and supports both document and key-value store models. Its flexible data model, reliable performance, and automatic scaling of throughput capacity make it a great fit for mobile, web, games, advertising technology (ad tech), IoT, and many other applications.

Amazon DynamoDB pricing at a glance

DynamoDB charges for reading, writing, and storing data in your DynamoDB tables, along with any optional features you choose to enable. DynamoDB has two capacity modes and those come with specific billing options for processing reads and writes on your tables: on-demand capacity mode and provisioned capacity mode.

DynamoDB read requests can be either strongly consistent, eventually consistent, or transactional.

On-Demand Capacity Mode

With on-demand capacity mode, you pay per request for the data reads and writes your application performs on your tables. You do not need to specify how much read and write throughput you expect your application to perform as DynamoDB instantly accommodates your workloads as they ramp up or down. DynamoDB charges for the core and optional features of DynamoDB.

Table: Amazon DynamoDB on-demand pricing

Core Feature Billing unit	Details
Read request unit (RRU)	API calls to read data from your table are billed in RRUs. A strongly consistent read request of up to 4 KB requires one RRU. For items larger than 4 KB, additional RRUs are required. For items up to 4 KB, an eventually consistent read request requires one-half RRU, and a transactional read request requires two RRUs.

Core Feature Billing unit	Details
Write request unit (WRU)	Each API call to write data to your table is a WRU. A *standard* WRU can write an item up to 1 KB. Items larger than 1 KB require additional WRUs. *A transactional* write requires two WRUs.

Example RRU:

- A strongly consistent read request of an 8 KB item requires two RRUs.

- An eventually consistent read request of an 8 KB item requires one RRU.
- A transactional read request of an 8 KB item requires four RRUs.

Example WRU:

- A write request of a 1 KB item requires one WRU.
- A write request of a 3 KB item requires three WRUs.
- A transactional write request of a 3 KB item requires six WRUs.

For details on how DynamoDB charges for the core and optional features of DynamoDB, see Pricing for On-Demand Capacity

Provisioned Capacity Mode

With provisioned capacity mode, you specify the number of data reads and writes per second that you require for your application. You can use auto scaling to automatically adjust your table's capacity based on the specified utilization rate to ensure application performance while reducing costs.

Table: DynamoDB Provisioned Capacity Mode

Core Feature Billing unit	Details
Read Capacity unit (RCU)	API calls to read data from your table are RCUs. For items up to 4 KB in size, one RCU can perform one *strongly consistent* read request per second. For items larger than 4 KB, additional RCUs are required. For items up to 4 KB, an eventually consistent read request requires one-half RCU, and a transactional read request requires two RCUs to perform one read per second.

Core Feature Billing unit	Details
Write Capacity Unit (WCU)	Each API call to write data to your table is a write request. For items up to 1 KB, one WCU can perform one *standard* write request per second. Items larger than 1 KB require additional WCUs. *Transactional* write requests require two WCUs to perform one write per second for items up to 1 KB.
Data Storage	DynamoDB monitors the size of tables continuously to determine storage charges. DynamoDB measures the size of your billable data by adding the raw byte size of the data you

	upload plus a per-item storage overhead of 100 bytes to account for indexing. The first 25 GB stored per month is free.

Example WCU

- A standard write request of a 1 KB item would require one WCU.
- A standard write request of a 3 KB item would require three WCUs.
- A transactional write request of a 3 KB item would require six WCUs.

Example RCU:

- A strongly consistent read of an 8 KB item would require two RCUs.
- An eventually consistent read of an 8 KB item would require one RCU.
- A transactional read of an 8 KB item would require four RCUs.

For details see Amazon DynamoDB pricing.

Data transfer

There is no additional charge for data transferred between DynamoDB and other AWS services within the same Region. Data transferred across Regions (for example, between DynamoDB in the US East (Northern Virginia) Region and Amazon EC2 in the EU (Ireland) Region) will be charged on both sides of the transfer.

Global tables

Global tables builds on DynamoDB's global footprint to provide you with a fully-managed, multi-region, and multi-active database that provides fast local read and write performance for massively scaled, global applications. The Global tables feature replicates your DynamoDB tables automatically across your choice of AWS Regions.

DynamoDB charges for global tables usage based on the resources used on each replica table. Write requests for global tables are measured in replicated WCUs instead of standard WCUs. The number of replicated WCUs consumed for replication depends on the version of global tables you are using.

Read requests and data storage are billed consistently with the choice of table class, which could be either Standard table class or Standard-Infrequent Access table class (that is, tables that are not global tables). If you add a table replica to create or extend a global table in new Regions, DynamoDB charges for a table restore in the added regions per gigabyte of data restored. Cross-Region replication and adding replicas to tables that contain data also incur charges for data transfer out.

For more information, see Best practices and requirements for managing global tables.

Learn more about pricing for additional DynamoDB features at the Amazon DynamoDB pricing page.

CloudFront

CloudFront is a global content delivery network (CDN) service that securely delivers data, videos, applications, and APIs to your viewers with low latency and high transfer speeds.

CloudFront pricing

CloudFront charges are based on the data transfers and requests used to deliver content to your customers. There are no upfront payments or fixed platform fees, no long-term commitments, no premiums for dynamic content, and no requirements for professional services to get started. There is no charge for data transferred from AWS services such as Amazon S3 or ELB. You can get started with CloudFront for free.

When you begin to estimate the cost of CloudFront, consider the following:

- **Data transfer out (internet/origin):** The amount of data transferred out of your CloudFront edge locations.
- **HTTP/HTTPS requests:** The number and type of requests (HTTP or HTTPS) made and the geographic region in which the requests are made.
- **Invalidation requests:** No additional charge applies for the first 1,000 paths requested for invalidation each month. Thereafter, a charge of $0.005 per path requested for invalidation applies.
- **Field level encryption requests**: Field-level encryption is charged based on the number of requests that need the additional encryption; you pay $0.02 for every 10,000 requests that CloudFront encrypts using field-level encryption in addition to the standard HTTPS request fee.
- **Dedicated IP SSL:** $600 per month for each custom SSL certificate associated with one or more CloudFront distributions using the dedicated IP version of custom SSL certificate support. This monthly fee is pro-rated by the hour.
- **Real-time log requests**: Real-time logs are charged based on the number of log lines that are generated. You pay $0.01 for every 1,000,000 log lines that CloudFront publishes to your log destination.
- **Lambda@Edge**: Lambda@Edge counts an invocation each time it starts executing in response to a CloudFront event globally. Invocation pricing is $0.60 per 1 million invocation ($0.0000006 per invocation). Capacity and duration are calculated together in GB per seconds used. Duration is calculated from the time your code begins executing until it returns or otherwise terminates. You are charged $0.00005001 for every GB/second used.

For more information, see Amazon CloudFront pricing.

Amazon Kendra

Amazon Kendra is a highly accurate and easy-to-use enterprise search service that's powered by ML. Amazon Kendra enables developers to add search capabilities to their applications so their end users can discover information stored within the vast amount of content spread across their company.

When you type a question, the service uses ML algorithms to understand the context and return the most relevant results, whether that be a precise answer or an entire document. For example, you can ask a question like "How much is the cash reward on the corporate credit card?" and Amazon Kendra will map to the relevant documents and return a specific answer like "two percent".

Amazon Kendra pricing

With the Amazon Kendra service, you pay only for what you use. There is no minimum fee or usage requirement. Once you provision Amazon Kendra by creating an index, you are charged for Amazon Kendra hours from the time an index is created until it is deleted. Partial index instance-hours are billed in one-second increments.

Amazon Kendra comes in two editions: Enterprise and Developer. Amazon Kendra Enterprise Edition provides a high-availability service for production workloads. Amazon Kendra Developer Edition provides

developers with a lower-cost option to build a proof-of-concept; this edition is not recommended for production workloads.

You can get started for free with the Amazon Kendra Developer Edition, which provides free usage of up to 750 hours for the first 30 days. Connector usage does not qualify for free usage; regular run time and scanning pricing will apply. If you exceed the free tier usage limits, you will be charged the Amazon Kendra Developer Edition rates for the additional resources you use. See Amazon Kendra pricing for pricing details.

Amazon Macie

Macie is a fully-managed data security and data privacy service that uses ML and pattern matching to cost-efficiently discover and protect your sensitive data in AWS at scale. Macie automatically detects a large and growing list of sensitive data types, including personally identifiable information (PII) such as names, addresses, and credit card numbers. It also gives you constant visibility of the data security and data privacy of your data stored in Amazon S3. Macie is easy to set up with one click in the AWS Management Console or a single API call. Macie provides multi-account support using AWS Organizations, so you can enable Macie across all of your accounts with a few clicks.

Macie pricing

With Macie, you are charged based on the number of Amazon S3 buckets evaluated for bucket-level security and access controls and the quantity of data processed for sensitive data discovery.

When you enable Macie, the service will gather detail on all of your S3 buckets, including bucket names, size, object count, resource tags, encryption status, access controls, and region placement. Macie will then automatically and continually evaluate all of your buckets for security and access control, alerting you to any unencrypted buckets, publicly accessible buckets, or buckets shared with an AWS account outside of your organization. You are charged based on the total number of buckets in your account after the 30-day free trial and charges are pro-rated per day.

After enabling the service, you are able to configure and submit buckets for sensitive data discovery. This is done by selecting the buckets you would like scanned, configuring a one-time or periodic sensitive data discovery job, and submitting it to Macie. Macie only charges for the bytes processed in supported object types it inspects. As part of Macie sensitive data discovery jobs, you will also incur the standard Amazon S3 charges for GET and LIST requests. See *Requests and data retrievals* pricing on the Amazon S3 pricing page.

Free tier | Sensitive data discovery

For sensitive data discovery jobs, the first 1 GB processed every month in each account comes at no cost. For each GB processed beyond the first 1 GB, charges will occur. Please refer to Amazon Macie Pricing for pricing details.

Note: You are only charged for jobs you configure and submit to the service for sensitive data discovery.

Amazon Kinesis

Kinesis makes it easy to collect, process, and analyze real-time, streaming data so you can get timely insights and react quickly to new information. Kinesis offers key capabilities to cost-effectively process streaming data at any scale, along with the flexibility to choose the tools that best suit the requirements of your application. With Kinesis, you can ingest real-time data such as video, audio, application logs, website clickstreams, and IoT telemetry data for ML, analytics, and other applications. Kinesis enables

you to process and analyze data as it arrives and respond instantly instead of having to wait until all your data is collected before the processing can begin.

Amazon Kinesis Data Streams is a scalable and durable real-time data streaming service that can continuously capture gigabytes of data per second from hundreds of thousands of sources. See Amazon Kinesis Data Streams Pricing for pricing details.

Amazon Kinesis Data Firehose is the easiest way to capture, transform, and load data streams into AWS data stores for near real-time analytics with existing business intelligence tools. See Amazon Kinesis Data Firehose Pricing for pricing details.

Amazon Kinesis Data Analytics is the easiest way to process data streams in real time with SQL or Apache Flink without having to learn new programming languages or processing frameworks. See Amazon Kinesis Data Analytics Pricing for pricing details.

Amazon Kinesis Video Streams

Amazon Kinesis Video Streams makes it easy to securely stream media from connected devices to AWS for storage, analytics, ML, playback, and other processing. Kinesis Video Streams automatically provisions and elastically scales all the infrastructure needed to ingest streaming media from millions of devices. It durably stores, encrypts, and indexes media in your streams, and allows you to access your media through easy-to-use APIs. Kinesis Video Streams enables you to quickly build computer vision and ML applications through integration with Amazon Rekognition Video, SageMaker, and libraries for ML frameworks such as Apache MXNet, TensorFlow, and OpenCV. For live and on-demand playback, Kinesis Video Streams provides fully-managed capabilities for HTTP Live Streaming (HLS) and Dynamic Adaptive Streaming over HTTP (DASH). Kinesis Video Streams also supports fully managed ultra-low latency two-way media streaming with WebRTC.

Kinesis Video Streams is ideal for building media streaming applications for camera-enabled IoT devices and for building real-time, computer vision-enabled ML applications that are increasingly prevalent across a wide range of use cases.

Kinesis Video Streams pricing

You pay only for the volume of data you ingest (GB), store (GB/month), and consume (GB) in your video streams. Kinesis Video Streams will only charge for media data it successfully received, with a minimum chunk size of 4 KB. For comparison, a 64 Kbps audio sample is 8 KB in size, so the minimum chunk size is set low enough to accommodate the smallest of audio or video streams.

WebRTC pricing

If you use WebRTC capabilities, you pay for the number of signaling channels that are active in a given month, the number of signaling messages sent and received, and Traversal Using Relays around NAT (TURN) streaming minutes used for relaying media. A signaling channel is considered active in a month if at any time during the month a device or an application connects to it. TURN streaming minutes are metered in one-minute increments.

You will incur standard AWS data transfer charges when you retrieve data from your video streams to destinations outside of AWS over the internet.

See Amazon Kinesis Video Streams Pricing for pricing details.

AWS IoT Events

AWS IoT Events helps companies continuously monitor their equipment and fleets of devices for failure or changes in operation and trigger alerts to respond when events occur. AWS IoT Events recognizes

events across multiple sensors to identify operational issues, such as equipment slowdowns, and generates alerts such as notifying support teams of an issue. AWS IoT Events offers a managed, complex event detection service on the AWS Cloud, accessible through the AWS IoT Events console (a browser-based graphical user interface (GUI) where you can define and manage your event detectors, or directly ingest APIs). Understanding equipment or a process based on telemetry from a single sensor is often not possible; a complex event detection service will combine multiple sources of telemetry to gain full insight into equipment and processes. You define conditional logic and states inside AWS IoT Events to evaluate incoming telemetry data to detect events in equipment or a process. When AWS IoT Events detects an event, it can initiate pre-defined actions in another AWS service, such as sending alerts through Amazon SNS.

AWS IoT Events pricing

With AWS IoT Events, you pay only for what you use with no minimum fees or mandatory service usage. When you create an event detector in AWS IoT Events, you apply conditional logic such as if-then-else statements to understand events, such as when a motor might be stuck. You are only charged for each message that is evaluated in AWS IoT Events.

See AWS IoT Events pricing for pricing details.

The AWS Free Tier is available to you for 12 months starting on the date you create your AWS account. When your free usage expires or if your application use exceeds the free usage tiers, you simply pay the above rates. Your usage is calculated each month across all regions and is automatically applied to your bill. Note that free usage does not accumulate from one billing period to the next.

AWS Cost Optimization

AWS enables you to take control of cost and continuously optimize your spend, while building modern, scalable applications to meet your needs. AWS's breadth of services and pricing options offer the flexibility to effectively manage your costs and still keep the performance and capacity you require. AWS is dedicated to helping customers achieve the highest savings potential. Get started with the steps below that will have an immediate impact on your bill today.

Choose the right pricing models

Use RIs to reduce Amazon RDS, Amazon Redshift, Amazon ElastiCache, and Amazon OpenSearch Service costs

For certain services like Amazon EC2 and Amazon RDS, you can invest in reserved capacity.

With Reserved Instances, you can save up to 72 percent over the equivalent on-demand capacity. RIs are available in three options: All up-front (AURI), partial up-front (PURI), and no upfront payments (NURI). Use the recommendations provided in AWS Cost Explorer RI purchase recommendations, which is based on your Amazon RDS, Amazon Redshift, ElastiCache, and OpenSearch Service usage.

Amazon EC2 Cost Savings

Use Amazon Spot Instances to reduce Amazon EC2 costs, use Compute Savings Plans to reduce Amazon EC2, Fargate, and Lambda costs, and use SageMaker Savings Plans to reduce SageMaker costs.

Match capacity with demand

Identify Amazon EC2 instances with low-utilization, and reduce cost by stopping or rightsizing.

Use AWS Cost Explorer Resource Optimization to get a report of Amazon EC2 instances that are either idle or have low utilization. You can reduce costs by either stopping or downsizing these instances. Use AWS Instance Scheduler to automatically stop instances. Use AWS Operations Conductor to automatically resize the Amazon EC2 instances (based on the recommendations report from Cost Explorer).

Identify Amazon RDS and Amazon Redshift instances with low utilization and reduce cost by stopping (RDS) and pausing (Redshift).

Use the Trusted Advisor Amazon RDS Idle DB instances check to identify DB instances which have not had any connection over the last seven days. To reduce costs, stop these DB instances using the

automation steps described here: Implementing DB Instance Stop and Start in Amazon RDS. For Redshift, use the Trusted Advisor Underutilized Redshift clusters check to identify clusters which have had no connections for the last seven days, and less than 5 percent cluster wide average CPU utilization for 99 percent of the last seven days. To reduce costs, pause these clusters using the steps in: Lower your costs with the new pause and resume actions on Amazon Redshift.

Analyze DynamoDB usage and reduce cost by leveraging AutoScaling or on-demand.

Analyze your DynamoDB usage by monitoring two metrics, ConsumedReadCapacityUnits and ConsumedWriteCapacityUnits, in CloudWatch. To automatically scale (in and out) your DynamoDB table, use the AutoScaling feature. Using the steps at Enabling DynamoDB auto scaling on existing tables, you can enable AutoScaling on your existing tables. Alternately, you can also use the on-demand option. This option allows you to pay-per-request for read and write requests so that you only pay for what you use, making it easy to balance costs and performance.

Implement processes to identify resource waste

Identify Amazon EBS volumes with low-utilization and reduce cost by snapshotting, then deleting them

Amazon EBS volumes that have very low activity (less than one IOPS per day) over a period of seven days indicate that they are probably not in use. Identify these volumes using the Trusted Advisor Underutilized Amazon EBS Volumes Check. To reduce costs, first snapshot the volume (in case you need it later), then delete these volumes. You can automate the creation of snapshots using the Amazon Data Lifecycle Manager. Follow the steps at Delete an Amazon EBS volume to delete Amazon EBS volumes.

Analyze Amazon S3 usage and reduce cost by leveraging lower cost storage tiers

Use Amazon S3 analytics to analyze storage access patterns on the object data set for 30 days or longer. Amazon S3 Analytics makes recommendations for leveraging S3 Infrequently Accessed (S3 IA) to reduce costs. You can automate moving these objects into a lower cost storage tier using lifecycle policies. Alternately, you can also use S3 Intelligent-Tiering, which automatically analyzes and moves your objects to the appropriate storage tier.

Review networking and reduce costs by deleting idle load balancers

Use the Trusted Advisor Idle Load Balancers check to get a report of load balancers that have a RequestCount of less than 100 over the past seven days. Then use Step 8: Delete your load balancer (optional) to delete these load balancers to reduce costs. Additionally, use the steps provided in Using AWS Cost Explorer to analyze data transfer costs to review your data transfer costs using Cost Explorer.

AWS Support Plan Pricing

AWS Support provides a mix of tools and technology, people, and programs designed to proactively help you optimize performance, lower costs, innovate faster, and focus on solving some of the toughest challenges that hold you back in your cloud journey.

There are four types of support plans available: Developer, Business, Enterprise On-Ramp, and Enterprise. All paid AWS Support plans are billed monthly with no long-term contracts. AWS Support fees are calculated on a per-account basis for Business and Developer Support plans. For Enterprise On-Ramp and Enterprise Support, you are billed based on the aggregate monthly AWS charges for all your account IDs subscribed to Enterprise On-Ramp or Enterprise Support. For more details, see Compare AWS Support Plans and AWS Support Plan Pricing.

Cost calculation examples

The following sections use the AWS Pricing Calculator to provide example cost calculations for two use cases.

Topics

- AWS Cloud cost calculation example (p. 27)
- Hybrid cloud cost calculation example (p. 30)

AWS Cloud cost calculation example

This example is a common use case of a dynamic website hosted on AWS using Amazon EC2, AWS Auto Scaling, and Amazon RDS. The Amazon EC2 instance runs the web and application tiers, and AWS Auto Scaling matches the number of instances to the traffic load. Amazon RDS uses one DB instance for its primary storage, and this DB instance is deployed across multiple Availability Zones.

Architecture

ELB balances traffic to the Amazon EC2 instances in an AWS Auto Scaling group, which adds or subtracts Amazon EC2 instances to match the load. Deploying Amazon RDS across multiple Availability Zones enhances data durability and availability. Amazon RDS provisions and maintains a standby in a different Availability Zone for automatic failover in the event of outages, planned or unplanned. The following illustration shows the example architecture for a dynamic website using Amazon EC2, AWS Auto Scaling, and Security Groups to enforce least-privilege access to AWS infrastructure and selected architecture components, and one Amazon RDS database instance across multiple Availability Zones (Multi-AZ deployment). All these components are deployed into a single region and virtual private cloud (VPC). The VPC spans two availability zones to support failover scenarios. Route 53 Resolver is used to manage and route requests for one hosted zone towards the Elastic Load Balancer.

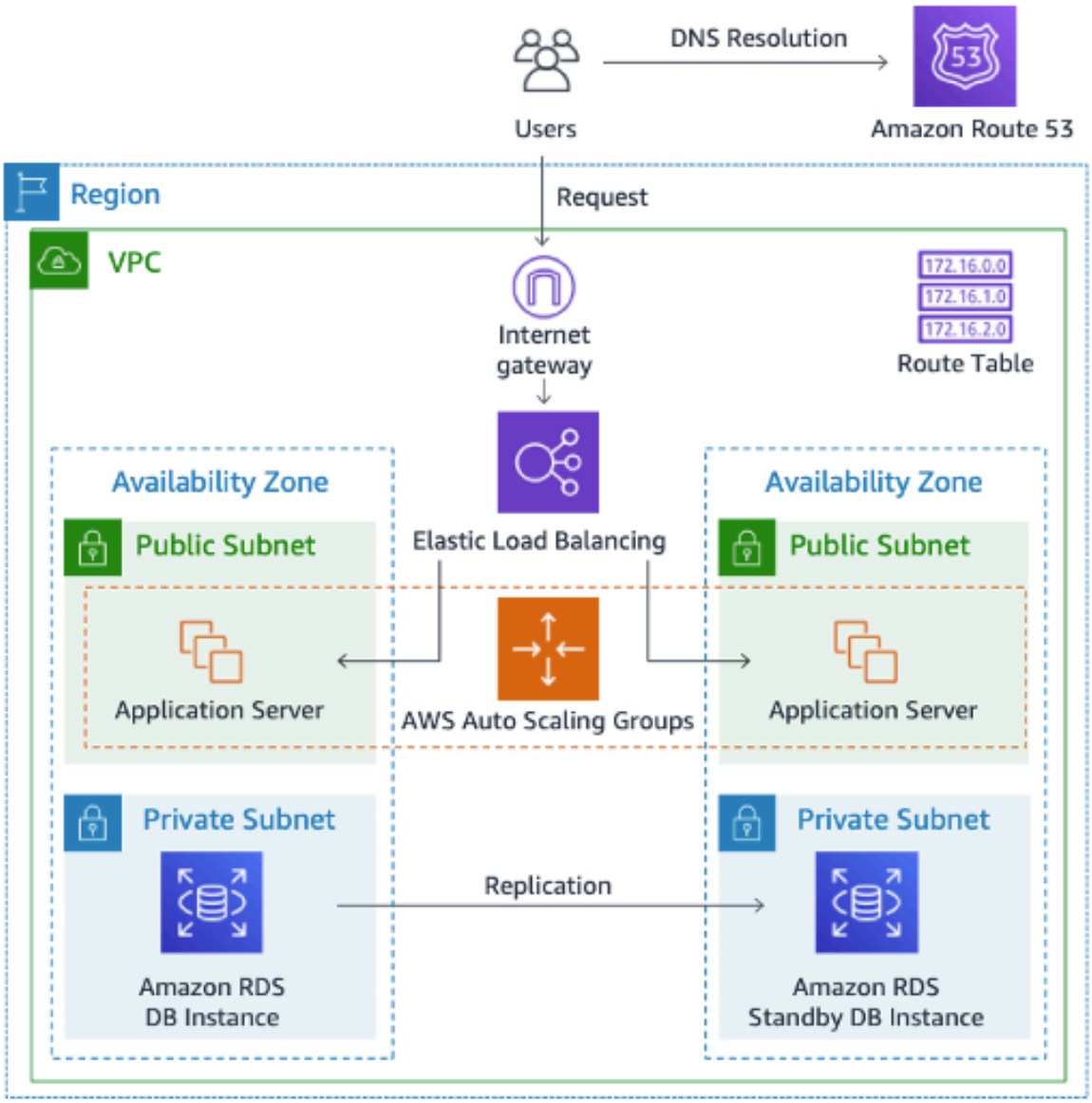

AWS Cloud deployment architecture

Daily usage profile

You can monitor daily usage for your application so that you can better estimate your costs. For instance, you can look at the daily pattern to figure out how your application handles traffic. For each hour, track how many hits you get on your website and how many instances are running, and then add up the total number of hits for that day.

Hourly instance pattern = (hits per hour on website) / (number of instances).

Examine the number of Amazon EC2 instances that run each hour, and then take the average. You can use the number of hits per day and the average number of instances for your calculations.

Daily profile = SUM(Hourly instance pattern) / 24

Amazon EC2 cost breakdown

The following table shows the characteristics for Amazon EC2 used for this dynamic site in the US East (Northern Virginia) Region.

Characteristic	Estimated Usage	Description
Utilization	100%	All infrastructure components run 24 hours per day, seven days per week
Instance	t3a.xlarge	16 GB memory, 4 vCPU
Storage	Amazon EBS SSD gp2	One Amazon EBS volume per instance with 30 GB of storage per volume
Data backup	Daily Amazon EBS snapshots	One Amazon EBS volume per instance with 30 GB of storage per volume
Data transfer	Data in: 1 TB/month Data out: 1 TB/month	10% incremental change per day
Instance scale	4	On average per day, there are four instances running
Load Balancing	20 GB/hour	ELB is used 24 hours per day, seven days per week. It processes a total of 20 GB/hour (data in and data out)
Database	MySQL, db.m5.large instance with 8 GB memory, 2 vCPUs, 100 GB storage	Multi-AZ deployment with synchronous standby replica in a separate Availability Zone

The total cost for one month is the sum of the cost of the running services and data transfer out, minus the AWS Free Tier discount. We calculated the total cost using the AWS Pricing Calculator.

Table: Cost breakdown

Service	Monthly	Annually	Configuration
ELB	$87.60	$1,051.20	Number of Network Load Balancers (one), Processed bytes per network load balancer (NLB) for TCP (20 GB per hour)
Amazon EC2	$439.16	$5,269.92	Operating system (Linux), quantity (four), storage for each Amazon EC2 instance (General Purpose SSD

			(gp2)), storage amount (30 GB), instance type (t3a.xlarge)
Amazon Elastic IP address	$0	$0	Number of Amazon EC2 instances (one), Number of EIPs per instance (one)
Amazon RDS for MySQL	$272.66	$3,271.92	Quantity (one) db.m5.large, Storage for each Amazon RDS instance (General Purpose SSD [gp2]), storage amount (100 GB)
Amazon Route 53	$183.00	$2,196.00	Hosted Zones (1), Number of Elastic Network Interfaces (2), Basic Checks Within AWS (0)
Amazon Virtual Private Cloud (Amazon VPC)	$92.07	$1,104.84	Data transfer cost, inbound (from: internet) 1 TB per month, outbound (to: internet) 1 TB per month, intra-Region 0 TB per month

Hybrid cloud cost calculation example

This example is a hybrid cloud use case of AWS Outposts rack, deployed on-premises and connected to AWS Cloud using AWS Direct Connect. Outposts extends the existing VPC from the selected AWS Region to the customer data center. Selected AWS services required to run on-premises (for example, Amazon Elastic Kubernetes Service (Amazon EKS)) are available on Outposts inside the Outpost Availability Zone, deployed inside a separate subnet.

Hybrid architecture description

The following example shows an Outpost deployment with distributed Amazon EKS service extending to on-premises environments.

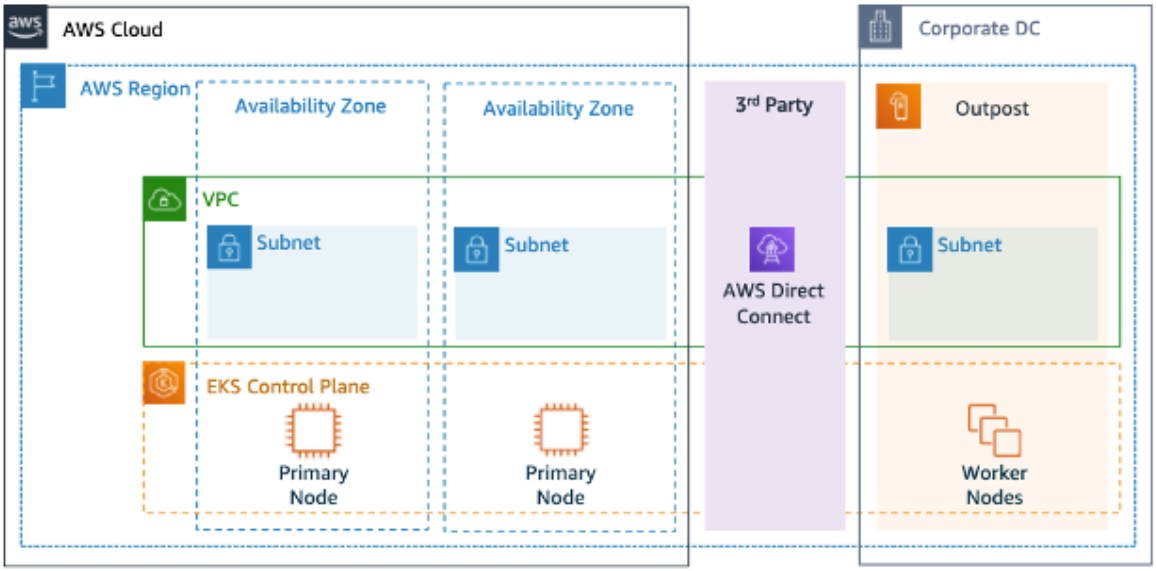

AWS Outpost with Amazon EKS Control Plane and Data Plane Architecture

Architecture

- The Control Plane for Amazon EKS remains in the Region, which means in the case of Amazon EKS, the Kubernetes Primary node will stay in the Availability Zone deployed to the Region (not on the Outposts).
- The Amazon EKS worker nodes are deployed on the Outpost, controlled by a Primary node deployed in the Availability Zone.

Traffic Flow

- The EKS Control Plane Traffic between EKS, AWS metrics, and CloudWatch transits third-party networks (AWS Direct Connect/AWS Site-to-Site VPN to the AWS Region).
- The Application / Data Traffic is isolated from Control plane and distributed between Outposts and local network.
- Distribution of Amazon Machine Images (AMIs) (deployed on Outpost) is driven by central Amazon ECR in Region; however, all images are cached locally on the Outpost.

Load Balancers

- Application Load Balancer is supported on Outpost as the only local ELB available.
- The Network Load Balancer and Classic Load Balancer stay in the Region, but targets deployed at Outposts are supported (including Application Load Balancer).
- On-premises (inside corporate DC) Load Balancers (for example, F5 BIG IP, NetScaler) can be deployed and routed via Local Gateway (inside AWS Outpost).

Hybrid cloud components selection

Customers can choose from a range of pre-validated Outposts configurations (*Figure: Example Outposts architecture*) offering a mix of Amazon EC2 and Amazon EBS capacity designed to meet a variety of

application needs. AWS can also work with customers to create a customized configuration designed for their unique application needs.

To identify the correct configuration, make sure to verify the deployment and operational parameters of the selected physical location for the AWS Outpost rack installation. The following example represents a set of parameters highlighting facility, networking, and power requirements needed for location validation (selected parameter: example value):

Purchase Option: All Upfront

Term: 3 Years

Max on premises power capacity: 20kVA

Max weight: 2,500lb

Networking uplink speed: 100Gbps

Number of Racks: 1

Average Power Draw per Rack: 9.34

Constraint (power draw/weight): Power Draw

Total Outpost vCPU: 480

Total Outpost Memory: 2,496 GiB

In addition to minimum parameters, you should make deployment assumptions prior to any order to minimize the performance and security impact on existing infrastructure (selected question: example assumption).

Question: What is the speed of the uplink ports from your Outposts Network Devices (OND)? Example answer: 40 or 100Gbps.

Question: How many uplinks per OND will you use to connect the AWS Outpost to your network? Example answer: Four uplinks.

Question: How will the Outpost service link (the Outpost control plane) access AWS services? Example answer: Service link will access AWS over a Direct Connect public VIF.

Question: Is there a firewall between Outposts and the Internet. Example answer: Yes

Considering these assumptions together with selected components will result in an architecture with a higher granularity of detail and will influence the overall cost of a hybrid cloud deployment (*Figure AWS Outpost with Amazon EKS Control Plane and Data Plane Architecture*).

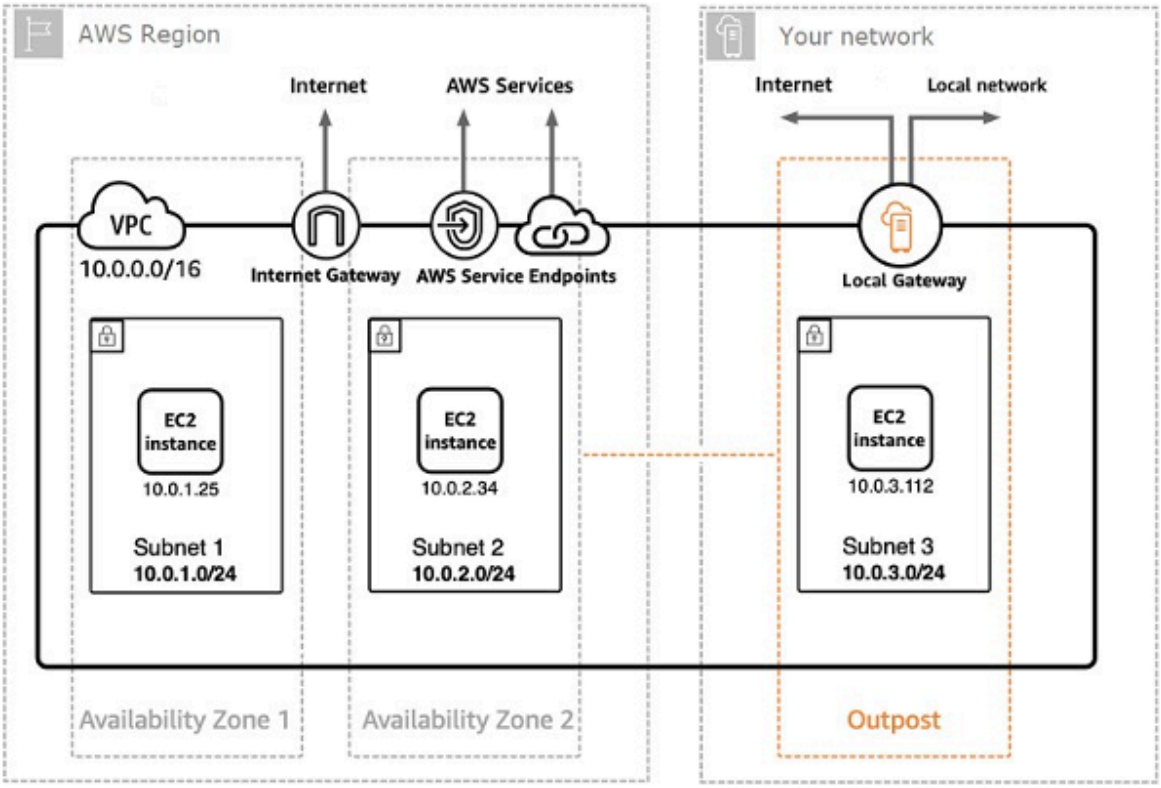

Hybrid cloud architecture deployment example

Hybrid cloud architecture cost breakdown

Hybrid cloud costs include multiple layers and components deployed across the AWS cloud and on-premises location. When you use AWS Managed Services on Outposts, you are charged for the services based only on usage by instance-hour and not for the underlying Amazon EC2 instance and Amazon EBS storage.

Breakdown of these services is showcased in next sections for a three-year term with partial upfront, all upfront, and no upfront options (Amazon EC2 and Amazon EBS capacity). Price includes delivery, installation, servicing, and removal at the end of term—there is no additional charge.

Outpost rack charges (customized example)

EC2 Charges

- c5.24xlarge, 11 TB

- $7,148.67 monthly;
- $123,650.18 up front, $3,434.73 monthly
- $239,761.41 up front

- 1 m5.24xlarge, 11 TB

- $7,359.69 monthly
- $127,167.06 up front, $3,532.42 monthly

- $246,373.14 up front

EBS Charges

- 11 TB EBS tier is priced at $0.30/GB monthly

Conclusion

Although the number and types of services offered by AWS have increased dramatically, our philosophy on pricing has not changed. You pay as you go, pay for what you use, pay less as you use more, and pay even less when you reserve capacity. All of these options empower AWS customers to choose their preferred pricing model and increase the flexibility of their cost strategy.

Projecting costs for a use case—for example, web application hosting—can be challenging because a solution typically uses multiple features across multiple AWS products. This means there are more factors and purchase options to consider.

The best way to estimate costs is to examine the fundamental characteristics for each AWS product, estimate your usage for each characteristic, and then map that usage to the prices posted on the website.

You can use the AWS Pricing Calculator to estimate your monthly bill. The calculator provides a per-service cost breakdown, as well as an aggregate monthly estimate. You can also use the calculator to see an estimation and breakdown of costs for common solutions.

Remember, you can get started with most AWS services at no cost using the AWS Free Tier.

Contributors

Contributors to this document include:

- Vladimir Baranek, Principal Partner Solution Architect, Amazon Web Services
- Senthil Arumugam, Senior Partner Solutions Architect, Amazon Web Services
- Mihir Desai, Senior Partner Solutions Architect, Amazon Web Services
- Nick Worthington, Solutions Architect, Amazon Web Services
- Marc Weiss, Solutions Architect, Amazon Web Services

Further Reading

For additional information, see:

- AWS Pricing
- AWS Pricing Calculator
- AWS Free Tier
- AWS Cloud Financial Management
- AWS Cost and Usage Reports
- AWS Cloud Economics Center

AWS glossary

For the latest AWS terminology, see the AWS glossary in the *AWS General Reference*.

Document Revisions

To be notified about updates to this whitepaper, subscribe to the RSS feed.

Change	Description	Date
Whitepaper updated (p. 39)	Updated and added service pricing details, options, calculation, and examples.	February 24, 2023
Minor update (p. 39)	Fix non-inclusive language.	April 6, 2022
Whitepaper updated (p. 39)	Updated and added service pricing details, options, calculation, and examples.	October 30, 2020
Initial publication (p. 39)	Whitepaper first published.	June 1, 2018

Notices

Customers are responsible for making their own independent assessment of the information in this document. This document: (a) is for informational purposes only, (b) represents current AWS product offerings and practices, which are subject to change without notice, and (c) does not create any commitments or assurances from AWS and its affiliates, suppliers or licensors. AWS products or services are provided “as is” without warranties, representations, or conditions of any kind, whether express or implied. The responsibilities and liabilities of AWS to its customers are controlled by AWS agreements, and this document is not part of, nor does it modify, any agreement between AWS and its customers.

© 2023 Amazon Web Services, Inc. or its affiliates. All rights reserved.